A DFT Methodology Targeting Online Testing Of Reversible Circuit

Bibhash Sen#, Jyotirmoy Das*
Dept. of Computer Science and Engineering, National Institute of Technology Durgapur, West Bengal-713209, India
#bibhash.sen@cse.nitdgp.ac.in / *jtrm.das@gmail.com
Biplab K Sikdar
Dept. Of computer Science and Technology, Bengal Engineering and Science University, Shibpur, West Bengal-711103, India
biplab@cs.becs.ac.in

Abstract— **Reversible logic is gaining importance for its ultra low power consumption. It has wide application in quantum computing, nanotechnology and optical computing. In this work, we propose a DFT (design for test) methodology for reversible logic blocks to enable online fault detection. A concurrent error detection technique, based on parity is introduced for the online testing. The methodology proposed for converting a 3X3 reversible gate into an online testable circuit ensures detection of all the stuck-at faults, bit flip faults and almost all multiple bit faults in logic blocks.**

Keywords- Reversible logic, Online testing, Fault models, Design for test, Concurrent testing.

I. INTRODUCTION

The current digital design techniques target energy efficient realization of complex logic circuits. Reversible logic design is one of the promising approaches for ultra low power consumption. It eliminates power dissipation due to information loss. In irreversible logic computation, each bit of information loss generates kBT ln2 joules of heat energy [1]. The minimum energy required for a binary transition is given by Shannon-von Neumann- Landauer (SNL) expression [1]

$$E_{bit} = k_B T \ln 2 = 0.017eV \qquad (1)$$

Where k_B is the Boltzmann constant, T=300K.

Reversible computation allows computing beyond the SNL limit. A zero power dissipation in logic circuits is possible only if a circuit is composed of reversible logic gates [2]. The currently available reversible gates can be used to implement arbitrary logic functions. However, testing of such reversible circuits is a major challenge. The number of levels of such a logic circuit is significantly higher than the standard [3]. This demands effective methodology for the next nano-meter era, to design power-aware systems that can detect online errors [5]. The methodologies for online testability of reversible circuits have been proposed in [3]–[6]. In most of these cases, online testability is supported through introduction of dual rail code [4] and parity comparator [3].

The above scenario motivates us to investigate a new test logic that ensures better fault coverage in online circuit testing. We propose a DFT methodology which in turn can be utilized to realize an online testable reversible-logic system. The proposed approach also eliminates the need for intermediate checkers, that is, the fault detection can be done only by observing the error detection bits defined for testing of the circuit.

II. REVERSIBLE LOGIC GATE

A logic gate is reversible if the mapping of its inputs to outputs is bijective-that is, every distinct input (Iv) yields a distinct output (O_v) and the number of inputs is equal to the number of outputs [7]. For an NxN reversible gate,

$$I_v = (I_1, I_2, I_3, \ldots\ldots, I_N),$$
$$O_v = (O_1, O_2, O_3, \ldots\ldots, O_N).$$

The most important reversible logic gates are the NOT, CNOT or Feynman, Toffoli, Fredkin, Peres etc [9].

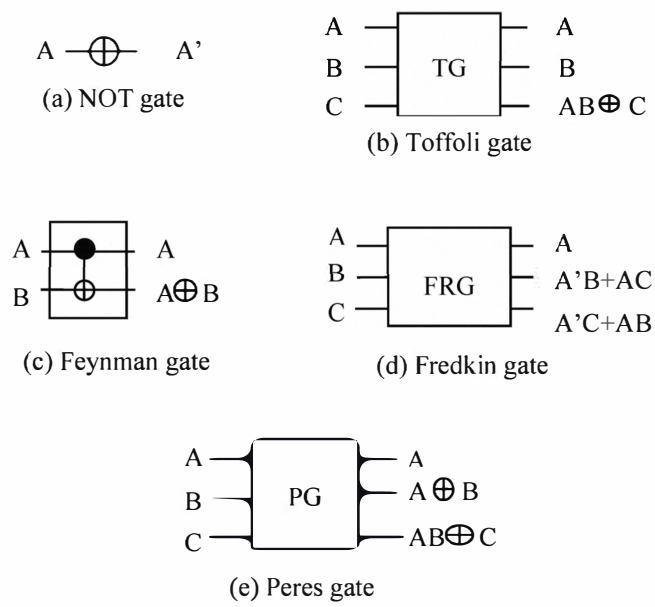

Fig.1 Reversible gates

The garbage outputs are added to convert a irreversible function into a reversible one. However, the synthesis of reversible logic differs significantly from traditional irreversible logic synthesis approaches as fan-out and feedback path are not permitted in reversible logic [9]. The fan outs can be avoided by using the reversible Feynman Gate (FG) shown in Fig. 2(b). It copies input to both the outputs.

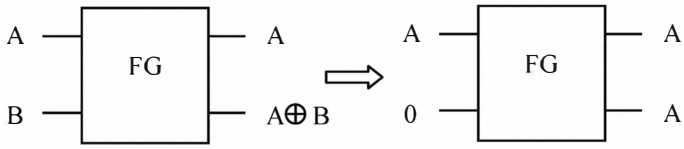

(a) Feynman gate (b) Copying by Feynman gate

Fig 2. Copying by Feynman gate

III. DFT FOR ONLINE TESTING OF REVERSIBLE GATE

This section, reports a testing algorithm (Algorithm 1) that generates the error detecting bits for online testability of 3 input reversible gates. Characterization of the basic inputs-outputs of a reversible gate leads to a DFT logic that results in three error detecting bits P, Q and R.

A. Error-detecting bits

The error detecting bit

Q ← detects whether the pair of inputs of a reversible gate that are involved in parity generation is faulty.

P ← detects whether the input, not selected for parity, becomes faulty.

R ← detects whether the copied input of reversible gate or one of the inputs involved in parity generation is faulty.

Table I lists the states of error detecting bits and the decision on states of a reversible circuit.

TABLE I
DECISION TABLE OF TESTER CIRCUIT

P Q R	Decision
0 0 0	fault free
x 1 x	faulty
1 x x	faulty
x x 1	faulty

B. Design for test

Algorithm 1: DFT Process

Input: A 3X3 reversible gate, say R

Output: An online testable block with the help of R and Feynman gate. Besides its normal output (X,Y,Z), the TB (testing block) generates error detecting bits P, Q and R destined for DFT

// Cascading/coupling of two same reversible gates //

Step 1. Cascade the two same reversible gates in following way

(i) Select O_1 ← an output of 2nd R gate such that PI==O_1

where PI ← FG1(any two inputs of 1st R gate).

//generates parity of two inputs,

OR

Select any two input of 1st R gate and two output from 2nd R gate such that PI==PO and PO ← FG2(any two outputs of 2nd R gate).

(ii) If PI ≠ O_1 or PI ≠ PO, Online testing for this circuit with this DFT is not possible.

Go to step 7.

Step 2. O_2 ←the rest output of 2nd R gate and

I_C ←the rest input of 1st R gate such that, both are not considered in step *1*.

Step 3. Propagate the outputs of 1st R gate to 2nd R gate in such a way that following three conditions hold:

a) PI == O_1 or PI == PO and

b) (O_2 == I_C or O_2 == I_C')

or (I_C == OP or OP == I_C')

or (IP == OP or IP == OP')

// I_C' is the complement of I_C,

// OP is parity of any two output and IP is parity of I_C and any of the other inputs. PO ≠ OP

// OP' is the complement of OP.

c) (O_P == I_P or O_P == I'_P) or

(P_o == I_P or P_o == I'_P)

//I_P is any of the two inputs involved in PI.

//O_P is any of the outputs of 2nd R gate.

//P_o is the parity of any 2 or 3 outputs to 2nd R gate.

// Generation of error-detecting bit P, Q, R //

Step 4. Consider I_{Cp} ← input of 1st R that gets copied.

If I_{Cp} is used in step 1, i.e. in PI generation, and it gets copied through the 2nd R gate, then R ← FG5(I_{Cp}, O_{Cp})

. **// R is an error detecting bit.**

// Here I_{Cp} is 1st output of FG1 and O_{Cp} is the copying output of 2nd R gate.

Step 5. If step 3.(a) holds true only, then create 2 copies of the outputs of 1st R gate using 3 feynman gates and propagate the copies to 2nd R gates such that previously stated all the three conditions in step 3 holds true.

//Here, O_2 is any of the outputs of 2nd R gate.

Step 6.

i) If (PI == O_1)

Q ← FG3(PI, O_1) **//Q is an error detecting bit.**

Else if (PI == PO)

Q ← FG3(PI, PO)

ii) If (O_2 == I_C)

P ← FG4(O_2, I_C) **//P is an error detecting bit.**

Else if (O_2 == I'_C)

P ← FG4(O_2, I'_C)

Else if (OP == I_C)

P ← FG4(I_C, OP)

Else if (OP == I'_C)

P ← FG4(I'_C, OP)

Else if (IP == OP)

P ← FG4(IP, OP)

Else if (IP == OP')

P ← FG4(IP, OP')

iii) If (O_P == I_P)

R ← FG5(O_P , I_P) **//R is an error detecting bit.**

Else if (O_P == I'_P)

Continue…

Continue…

$R \leftarrow FG5(O_P, I'_P)$

Else if $(P_I == I_P)$

$R \leftarrow FG5(P_I, I_P)$

Else if $(P_I == I'_P)$

$R \leftarrow FG5(P_I, I'_P)$

Step 7. Stop.

IV. EXPERIMENTAL RESULTS

The proposed DFT method has been applied on the reversible gates like peres, toffoli etc and full-adder. The following subsections report the outcome of our experimentations.

A. DFT for toffoli gate

Fig.3 shows a testable toffoli gate, resulted on application of the proposed DFT methodology. Let assume a_i represents a 3 bit pattern with decimal value i, e.g. a_0 = 000/A'B'C', a_5 = 101/AB'C. In the bit-flip fault analysis tables (Table II and III) for toffoli gate, first column represents all possible input combinations. The all other columns represent bit pattern of the three error detecting bits (P, Q, R) due to a bit flip fault noted in the column heading. To indicate the bit flipped in a pattern, we denote it by its inversion. If the 1st input bit gets flipped, we denote it by A'BC/011, i.e. a_3. If both the first and second bits get flipped then the fault pattern is A'B'C/001.

Let, the input applied to testable toffoli is a_2 i.e. 010, in Table II the third row. Now if bit B is flipped, then bit-flip error pattern is AB'C / 101, i.e. a_5, in Table II the 7th column. For this fault pattern the output value of <PQR> is a_2 i.e. <010>, in 3rd row, 7th column of Table II.

Like the bit flip faults in the input lines, bit flip faults in the output lines can also be detected. Here also, the circuits in which the parity of copied inputs and another input is checked through the gate FG3 of Fig.2 can not detect double bitflip fault if the fault occurs in the copying output and the other output lines whose corresponding input line's parity was checked using FG3. Moreover, the output PQ=11 indicates not only the probability of double bit flip fault in the input lines but also the bit flip fault (single, or multiple) on the output lines. Since, the parity of 2nd and 3rd inputs are checked using FG4 and none of these are copied input, now if the double bit-flip fault occurs in these outputs, then it remains undetected (PQR=000). All the patterns of error detecting bits, due to bit-flip errors occurred in the input and output lines of toffoli, are shown in Table II and III respectively.

It can be observed that for the circuits in which one of the inputs to FG1 gets copied, the pattern P, Q, R is fixed for a same fault pattern generated by different input strings. But it is different for all the different fault patterns generated by different input strings. Hence by analyzing the string PQR, the faulty bit can be detected. It can be observed that for the circuits in which one of the inputs to FG1 gets copied, the pattern P, Q, R is fixed for a same fault pattern generated by different input string. But it is different for all the different fault patterns generated by different input string. Hence by analyzing the string PQR, the fault bit can be detected. It effectively leads to the diagnosis of fault in an online testable circuit.

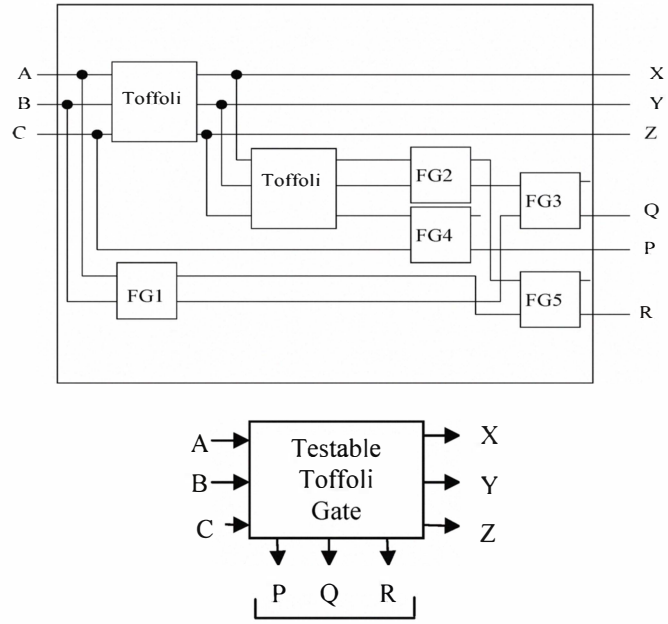

Fig. 3 Synthesis of online testable Toffoli gate

TABLE II
INPUT LINE FAULT PATTERNS IN TOFFOLI AND CORRESPONDING P, Q, R

Input A B C	Bit-Flip Fault						
	a_0	a_1	a_2	a_3	a_4	a_5	a_6
a_0	a_5	a_1	a_7	a_3	a_6	a_2	a_4
a_1	a_5	a_1	a_7	a_3	a_6	a_2	a_4
a_2	a_5	a_1	a_7	a_3	a_6	a_2	a_4
a_3	a_5	a_1	a_7	a_3	a_6	a_2	a_4
a_4	a_5	a_1	a_7	a_3	a_6	a_2	a_4
a_5	a_5	a_1	a_7	a_3	a_6	a_2	a_4
a_6	a_5	a_1	a_7	a_3	a_6	a_2	a_4
a_7	a_5	a_1	a_7	a_3	a_6	a_2	a_4

TABLE III
OUTPUT LINE FAULT PATTERNS IN TOFFOLI AND CORRESPONDING P, Q, R

Input A B C	Output X Y Z	Bit-Flip Fault						
		a_0	a_1	a_2	a_3	a_4	a_5	a_6
a_0	a_0	a_1	a_5	a_7	a_3	a_6	a_2	a_4
a_1	a_1	a_1	a_5	a_7	a_3	a_6	a_2	a_4
a_2	a_2	a_1	a_5	a_7	a_3	a_6	a_2	a_4
a_3	a_3	a_1	a_5	a_7	a_3	a_6	a_2	a_4
a_4	a_4	a_1	a_5	a_7	a_3	a_6	a_2	a_4
a_5	a_5	a_1	a_5	a_7	a_3	a_6	a_2	a_4
a_6	a_7	a_1	a_5	a_7	a_3	a_6	a_2	a_4
a_7	a_6	a_1	a_5	a_7	a_3	a_6	a_2	a_4

TABLE IV
INPUT LINE FAULT PATTERNS IN PERES AND CORRESPONDING P, Q, R

Input A B C	Bit-Flip Fault						
	a_0	a_1	a_2	a_3	a_4	a_5	a_6
a_0	a_3	a_7	a_1	a_5	a_6	a_2	a_4
a_1	a_3	a_7	a_1	a_5	a_6	a_2	a_4
a_2	a_3	a_7	a_1	a_5	a_6	a_2	a_4
a_3	a_3	a_7	a_1	a_5	a_6	a_2	a_4
a_4	a_3	a_7	a_1	a_5	a_6	a_2	a_4
a_5	a_3	a_7	a_1	a_5	a_6	a_2	a_4
a_6	a_3	a_7	a_1	a_5	a_6	a_2	a_4
a_7	a_3	a_7	a_1	a_5	a_6	a_2	a_4

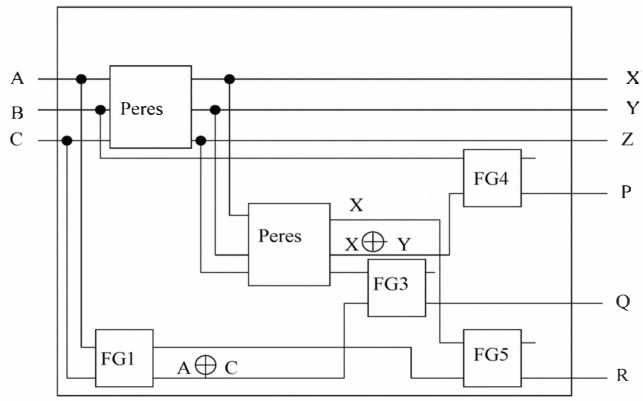

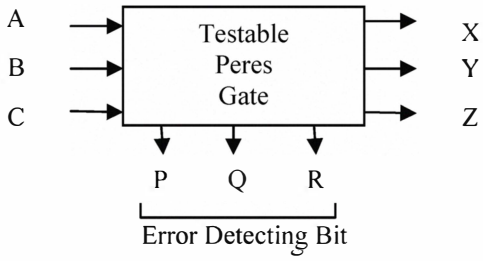

Fig.4. Synthesis of online testable peres gate

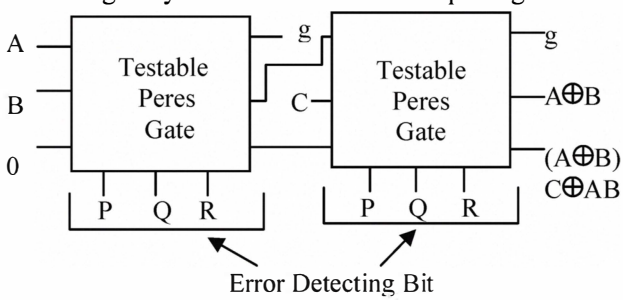

Fig.5. Design of online testable full adder based on Peres Gate

B.DFT for full adder circuit based on peres gate

The testable Peres gate architecture is shown in Fig.4.The testable full adder circuit based on peres gate is shown in Fig. 5. The fault analysis of Peres gate is reported in Table IV and V.

TABLE V
OUTPUT LINE FAULT PATTERNS IN PERES AND CORRESPONDING P, Q, R

ABC	XYZ	a_3	a_5	a_6	a_1	a_4	a_2	a_0
a_0	a_0	a_5	a_4	a_2	a_3	a_7	a_6	a_1
a_1	a_1	a_5	a_4	a_2	a_3	a_7	a_6	a_1
a_2	a_2	a_7	a_4	a_2	a_1	a_5	a_6	a_3
a_3	a_3	a_7	a_4	a_2	a_1	a_5	a_6	a_3
a_4	a_6	a_7	a_6	a_2	a_3	a_5	a_4	a_1
a_5	a_7	a_7	a_6	a_2	a_3	a_5	a_4	a_1
a_6	a_5	a_5	a_6	a_2	a_1	a_7	a_4	a_3
a_7	a_4	a_5	a_6	a_2	a_1	a_7	a_4	a_3

In toffoli gate, the test output is fixed for a particular fault pattern and it is different for all the fault patterns. On the other hand, in peres gate, test output for a particular fault pattern is not fixed. It is observed that, the input strings that differ only by their least significant bit, give the same test output for a particular fault in peres and also it is different for all the different fault patterns.

The analysis of stuck-at fault detection, as shown in for bit flip faults, reveals that the minimal test set that can detect all the stuck at faults on the input lines for peres and toffoli gate is {010,001,101,110}. Further, if all possible 3 bit inputs are included in the test set, it can also diagnose the different instances of stuck at faults

A detailed study on the performance of proposed DFT algorithm with the existing reversible gates is reported in Table.VI.

Evaluation of the proposed DFT can be comprehended easily with the help of the comparative results given in Table VII. One of the main factors of a circuit is its hardware complexity. It can be proved that the proposed circuit is better than the existing approaches in terms of hardware complexity. Here,

α= a two input EXOR gate calculation

β= a two input AND gate calculation

γ = a NOT gate calculation

All the arithmetic and benchmark circuits are synthesised by the proposed DFT using peres gate as R gate.

A. Fault diagnosis of toffoli and peres gates

In peres and toffoli gate if the output lines are fault free and the output bit PQ=11, then this is a double bit flip fault in input lines. Moreover one of the faulty input lines is the one which is not involved in PI. The other faulty input line is detected by output bit R. eg: in Toffoli gate tester circuit, if R=1, it indicates input line A is faulty. In Table VIII, we have listed the bit flip fault diagnosis of peres and toffoli gate. We can not get any particular testing output pattern for the bit flip faults in the output lines of peres gate. The same test set is enough to detect all the stuck-at faults on the output lines but we can not get any diagnosis pattern for the output lines.

TABLE VI
PERFORMANCE OF PROPOSED DFT ALGORITHM

Circuit	No. of R gate	No. of FG	No. of Garbage	Bitflip detect %	Stuck at detect %
RUG [11]	2	8	8	85.71	100
ULG [5]	2	7	6	85.71	100
G1[10] (Fredkin)	1	4	4	100	100
G2[7] (Toffoli)	1	5	3	100	100
G3[8] (Peres)	1	4	3	100	100
G4[8] (Margolus)	1	5	3	100	100
G5 [8]	1	5	3	100	100
G6 [8]	1	5	3	100	100
G7 [8]	1	5	3	100	100
G8 [8]	1	5	3	100	100
G9 [8]	1	5	3	100	100
G10 [8]	1	7	4	100	100
TR [12]	1	4	3	100	100

TABLE VII
COMPARATIVE PERFORMANCE OF ONLINE TESTABILITY METHODS

Gate	[3]	[13]	[5]	Proposed DFT
Peres	$36\alpha+12\beta$	$9\alpha+2\beta$	8α	$6\alpha+\beta$
Toffoli	$48\alpha+16\beta$	$18\alpha+4\beta$	8α	$6\alpha+\beta$
Fredkin	$132\alpha+44\beta$	$45\alpha+10\beta$	8α	$5\alpha+4\beta+2\gamma$
Full adder	$96\alpha+32\beta$	$9\alpha+2\beta$	16α	$12\alpha+2\beta$
Full subtr.	$96\alpha+32\beta$	$27\alpha+6\beta$	24α	$18\alpha+3\beta$
Ham3[14]	$72\alpha+24\beta$	$36\alpha+8\beta$	24α	$18\alpha+3\beta$
3_17[14]	$120\alpha+40\beta$	$63\alpha+14\beta$	56α	$42\alpha+7\beta$
nth Prime3 [14]	$84\alpha+28\beta$	$18\alpha+4\beta$	32α	$24\alpha+4\beta$
Average(α)	85.5	28.13	22	16.38
Average(β)	28.5	6.25	_	3.13
Improvement (α)	80.84%	41.77%	25.5 5%	–
Improvement (β)	89.02%	49.92%	–	–

V. CONCLUSION

In this paper, we proposed a DFT methodology that converts a 3X3 reversible gate, into a testable reversible gate introducing three error detecting code, is proposed. The resultant testable circuit can detect online all the stuck-at faults and majority of multiple Single Event Upsets or bit-flip faults. The important feature of this technique is that it does not propose a change in the reversible gate for the purpose of adding testability feature. Besides eliminating the need for checkers in the circuit, the DFT method also reduces the hardware complexity.

TABLE VIII
BIT FLIP FAULT DIAGNOSIS OF TOFFOLI AND PERES GATE USING DFT

PQR	Faulty input line(s) for TOFFOLI	Faulty output line(s) for TOFFOLI	Faulty input line(s) for PERES
001	AB	ABC	AC
010	B	B	B
011	A	A	ABC
100	C	C	C
101	ABC	AB	A
110	BC	BC	BC
111	AC	AC	AB

VI. REFERENCES

[1] R. Landauer, 'Irreversibility and Heat Generation in the Computational Process', IBM Journal of Research and Dev 5, pp. 183-191,1961.

[2] C.H. Bennett, 'Logical Reversibility of Computation', IBM J.Research and Development, pp. 525-532, November 1973.

[3] D.P. Vasudevan, P.K. Lala, D. Jia, and J.P. Parkerson 'Reversible-logic design with online testablitiy', IEEE transactions on Instrumentation and Measurement, 55(2):406414, April 2006.

[4] Navid Farazmand, Masoud Zamani, and Mehdi B. Tahoori, 'Online Multiple Fault Detection in Reversible Circuits', International Symposium on Defect and Fault Tolerance in VLSI Systems, 2010.

[5] Sk. Noor Mohammad and Kamakoti Veezinathan, 'Constructing Online Testable Circuits Using Reversible Logic', IEEE Transactions on Instrumentation and Measurement, 59(1):101109, Jan, 2010.

[6] Moshaddek Hasan, A.K.M. Tauhidul Islam, Ahsan Raja Chowdhury, 'Design and Analysis of Online Testability of Reversible Sequential Circuits', International Conference on Computer and Information Technology(ICCIT 2009), Dhaka, Bangladesh, 21-23 December, 2009.

[7] T. Toffoli, 'Reversible Computing', MIT/LCS/TM-15, MA, 1980.

[8] P. Kerntopf, 'Synthesis of multi-purpose reversible logic gates', in Proc. Euromicro Symp DSD, 2002, PP 259-267.

[9] P. Gupta, A. Agarwal, and N.K. Jha, 'An Algorithm for Synthesis of Reversible Logic Circuits', IEEE Trans.Computer-Aided Design, vol. 25, no. 11, pp. 2317-2330, Nov. 2006.

[10] E. Fredkin and T. Toffoli, 'Conservative Logic', Int. J. Theror. Phys.,vol.21, no. 3/4 , pp. 219253, 1982.

[11] B. Sen, Tanumoy Adak, Anshu S Anand and B. K. Sikdar, 'Synthesis of Reversible Universible QCA Gate Structure for Energy Efficient Digital Design', IEEE TENCON, Bali, Indonesia, Nov 21-24,2011.

[12] Himanshu Thapliyal and Nagarjan Ranganathan, 'Design of Efficient Reversible Binary Subtractors Based on A New Reversible Gate', IEEE Computer Society Annual Symposiumbon VLSI, 2009.

[13] H. Thapliyal and A. P. Vinod 'Designing efficient online testable reversible adders with new reversible gate', IEEE International Symposium on Circuits and Systems, pages 10851088, May 2007.

[14] http://www.iqc.cs/dmaslov/research.html